CAD FILE:

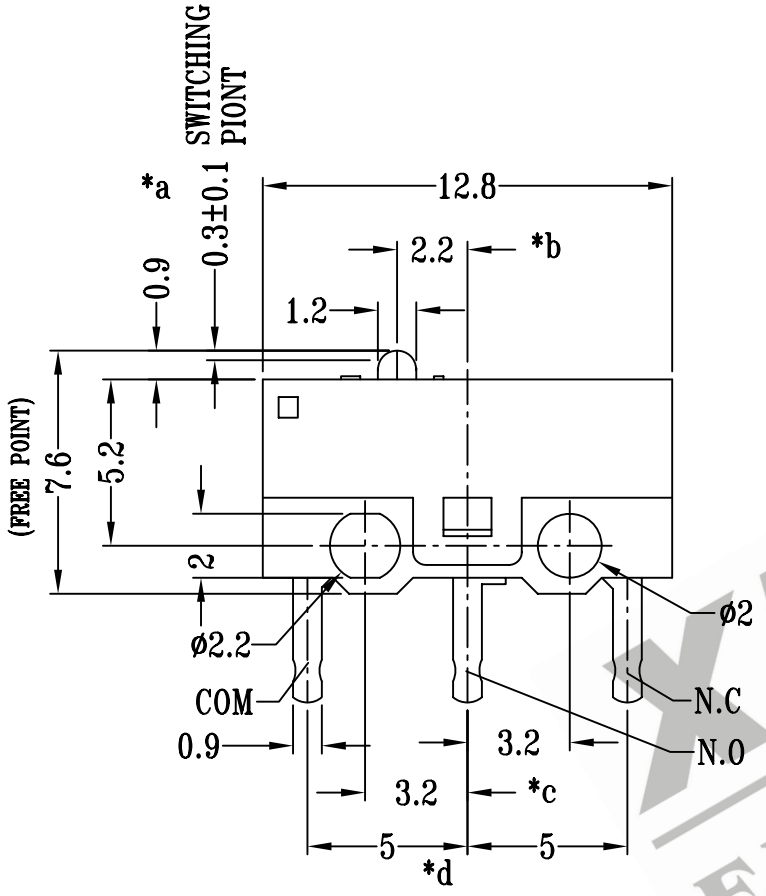

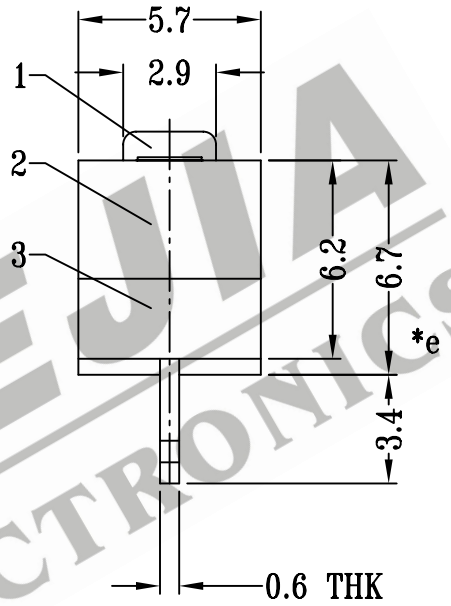

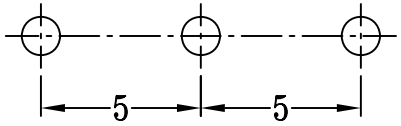

P.C.B LAYOUT

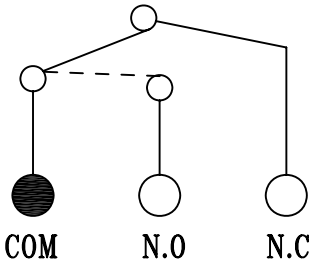

SCHEMATIC

注:带"*"表示关键尺寸(5个)

NO.	PART NAME	MATERIAL	Q'TY	FINISHING
8	CONTACT	PBS STRIP	1	NATURAL
7	CONTACT B	SLIVER	1	NATURAL
6	TERMINAL(COM)	BRASS STRIP	1	Ag PLATED OVER Ni PLATED
5	TERMINAL(N.O)	BRASS STRIP	1	Ag PLATED OVER Ni PLATED
4	TERMINAL(N.C)	BRASS STRIP	1	Ag PLATED OVER Ni PLATED
3	INSERT CASE	NYLON+F.G	1	WHITE
2	HOUSING	PC	1	BLACK
1	KNOB	POM	1	BLACK

TOLERANCE UNLESS SPECIFIED
WITHIN: 1.5±0.1mm
OVER : 1.5±0.2mm

SHENZHEN XIEJIA ELECTRONICS CO.,LTD.

ISSUE	DATE	DESCRIPTIONS	APPD.

TITLE : MICRO SWITCH
UNIT : MM
DRWG NO.: XJ-DR-MX1387-00
MODEL: MX-1387
SCALE: 4:1

DWN.	ZHOUYU	2004-5-8
CHK'D	FANGYING	2004-5-8
APPD.	KANGXINAN	2004-5-8

ALL MATERIALS MUST BE COMPLIANT TO ROHS

XIEJIA ELECTRONICS